RevNo	Revision note	Date	Signature	Checked

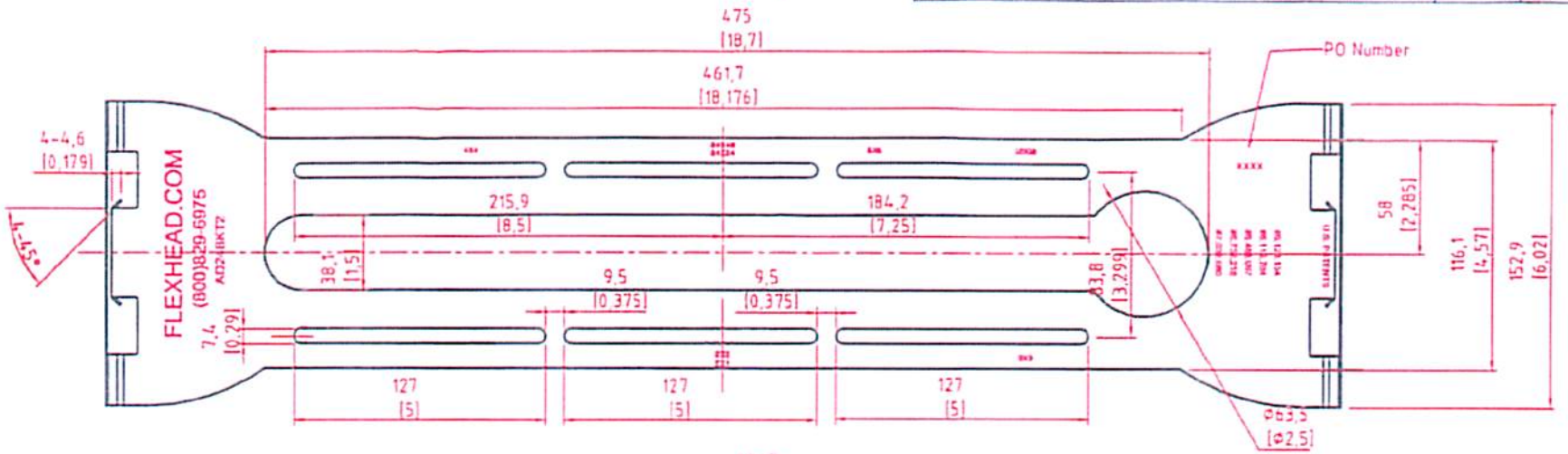

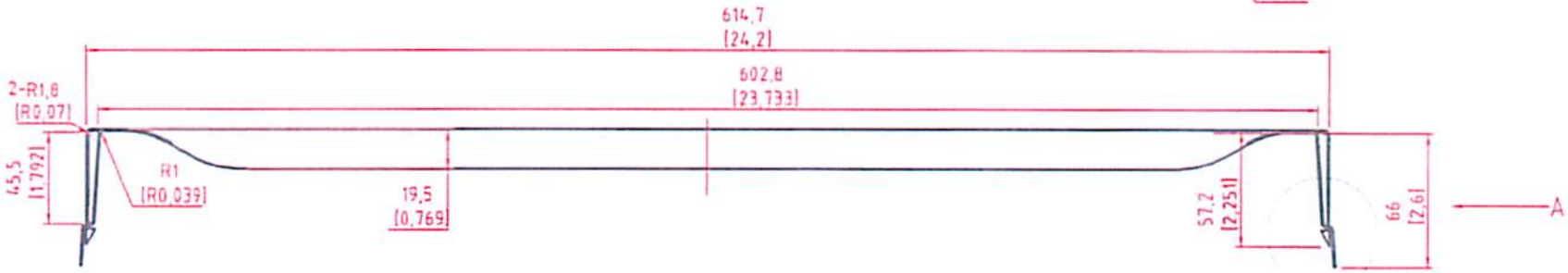

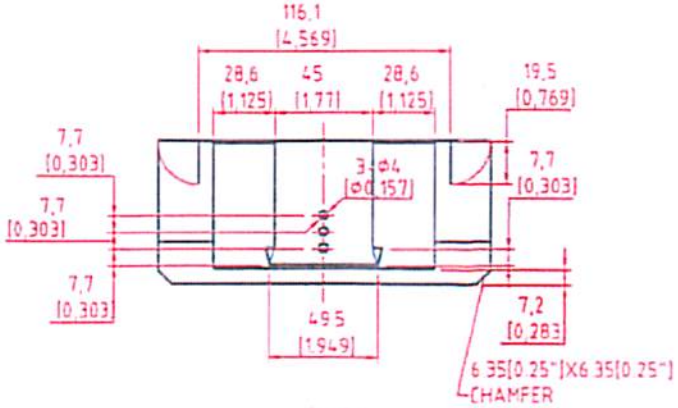

A-A

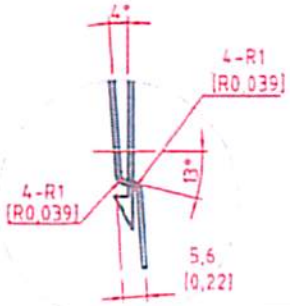

B scale

PART NOTES

1. ALL BEND RADII SHALL BE 1-2MM (0.04"-0.08") WHERE PARCTICAL
2. MATERIAL SPECIFICATION: 1MM (0.0394") THICKNESS GALVANIZED CRS
3. REFER THE DRAWING FOR STAMPED WORDS

PART TOLERANCE NOTES

0 - 254 (10") +/- 0.35 (0.0138")
254 (10") - Above +/- 0.70 (0.0276")
BAND RADII +/- 1.00mm(0.04")

Itemref	Quantity	Title/Name, designation, material, dimension etc		Article No./Reference	
Designed by	Checked by	Approved by - date	File name	Date 06/09/28	Scale 1:2

FLEXHEAD INDUSTRIES

Bracket (AD24BKT2)

Dwg# AD-24-BKT-2 | Edition C | Sheet 1/1