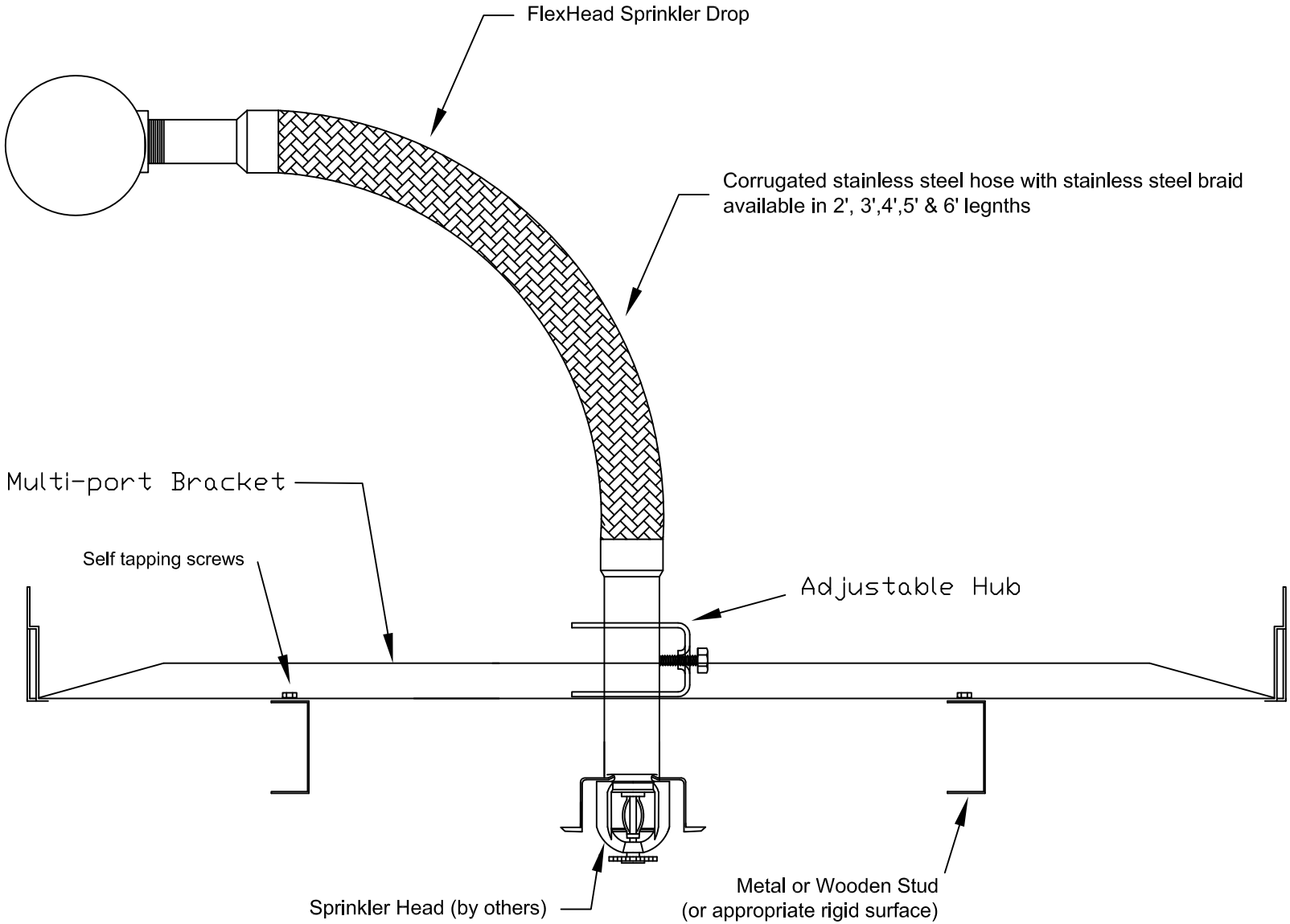

REV	DATE	DESCRIPTION

THIS DRAWING, SPECIFICATIONS, AND CONCEPTS CONTAINED HEREIN ARE THE SOLE PROPERTY OF FLEXHEAD INDUSTRIES, AND MAY NOT BE REPRODUCED OR USED IN ANY FASHION WITHOUT THE PRIOR WRITTEN PERMISSION OF FLEXHEAD INDUSTRIES, INC.

Flexhead® Commercial Ceiling Unit
Sheet Rock Ceiling Application
Model #2024,2036,2048,2060,2072

FLEXHEAD INDUSTRIES

File Name: COT.DWG

Drawn By: TEF

JOB No:

SHEET 1 OF 1